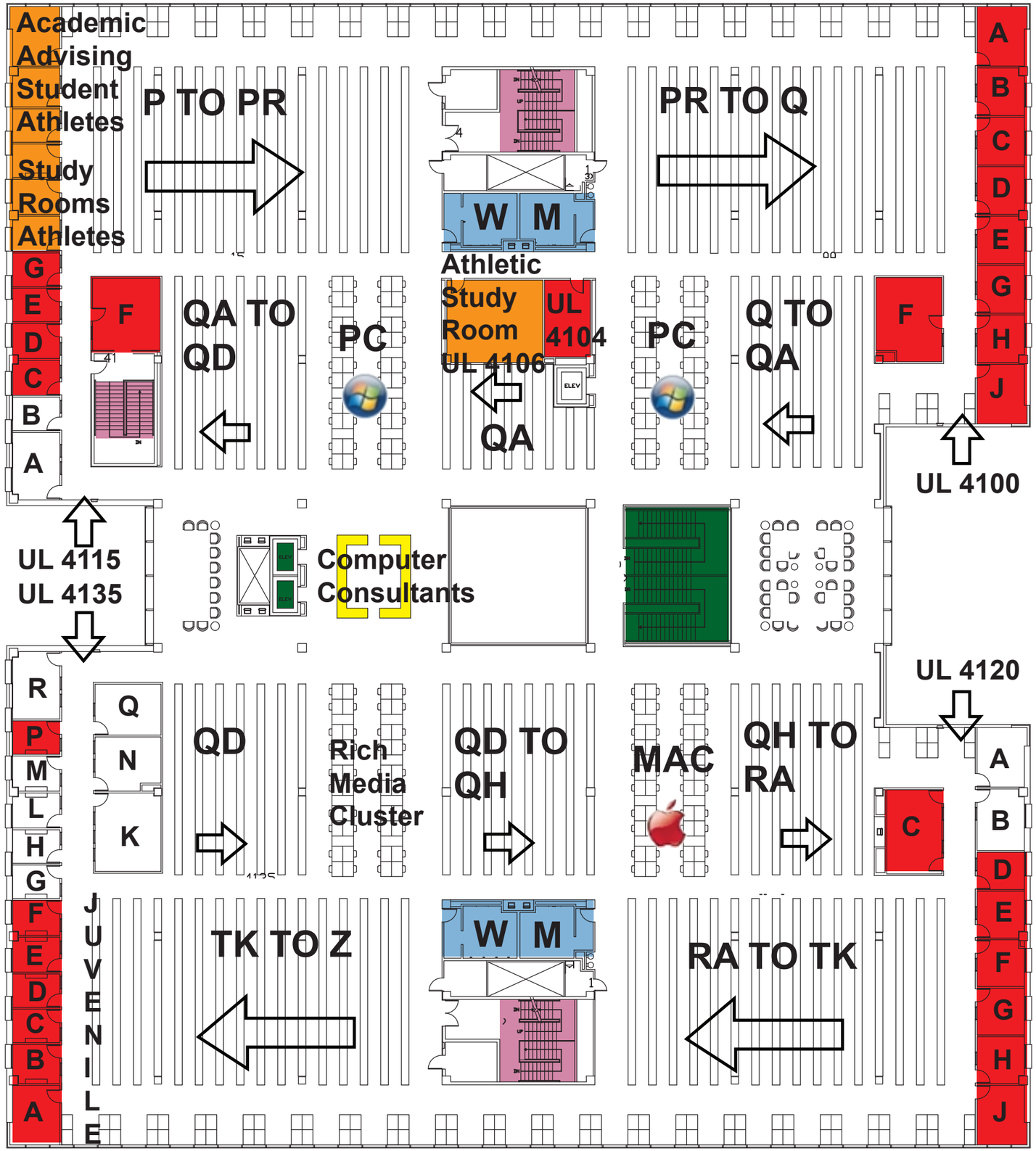
Academic Advising
Student Athletes
Study Rooms Athletes
P TO PR
PR TO Q
W M
Athletic Study Room UL 4106
UL 4104
QA TO QD
PC
PC
Q TO QA
QA
UL 4100
UL 4115
UL 4135
Computer Consultants
UL 4120
QD
Rich Media Cluster
QD TO QH
MAC
QH TO RA
TK TO Z
W M
RA TO TK
JUVENILE